Product data sheet
Characteristics

34006
circuit breaker Compact NS2000N - 2000 A - 3 poles - fixed - without trip unit

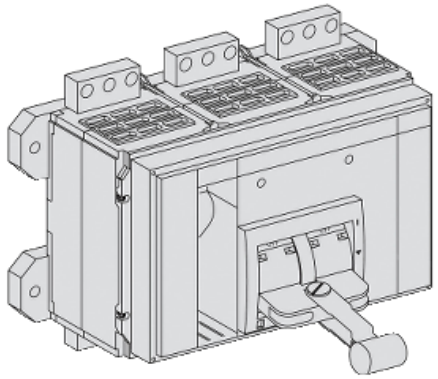

Main

Range of product	NS1600b...3200
Product or component type	Basic frame
Device short name	Compact NS2000N
Device application	Distribution
Circuit breaker name	Compact NS2000N
Poles description	3P
Network type	AC
Breaking capacity code	N
Suitability for isolation	Yes conforming to IEC 60947-2
Utilisation category	Category B

Complementary

Network frequency	50/60 Hz
Control type	Toggle
Mounting mode	Fixed
Mounting support	Backplate
Upside connection	Front
Downside connection	Front
[In] rated current	2000 A (50 °C)
[Ui] rated insulation voltage	800 V AC 50/60 Hz conforming to IEC 60947-2
[Uimp] rated impulse withstand voltage	8 kV conforming to IEC 60947-2
[Ue] rated operational voltage	690 V AC 50/60 Hz conforming to IEC 60947-2
Circuit breaker CT rating	2000 A
Breaking capacity	Icu 65 kA at 440 V AC 50/60 Hz conforming to IEC 60947-2 Icu 70 kA at 380/415 V AC 50/60 Hz conforming to IEC 60947-2 Icu 85 kA at 220/240 V AC 50/60 Hz conforming to IEC 60947-2 Icu 65 kA at 500/525 V AC 50/60 Hz conforming to IEC 60947-2 Icu 65 kA at 660/690 V AC 50/60 Hz conforming to IEC 60947-2
[Ics] rated service breaking capacity	Ics 52 kA 380/415 V AC 50/60 Hz manual operation conforming to IEC 60947-2 Ics 65 kA 220/240 V AC 50/60 Hz manual operation conforming to IEC 60947-2 Ics 65 kA 440 V AC 50/60 Hz manual operation conforming to IEC 60947-2 Ics 65 kA 500/525 V AC 50/60 Hz manual operation conforming to IEC 60947-2 Ics 65 kA 660/690 V AC 50/60 Hz manual operation conforming to IEC 60947-2
Protection type	Without protection

Disclaimer: This documentation is not intended as a substitute for and is not to be used for determining suitability or reliability of these products for specific user applications

Mechanical durability	5000 cycles conforming to IEC 60947-2
Electrical durability	1000 cycles 690 V AC 50/60 Hz In conforming to IEC 60947-2 2000 cycles 440 V AC 50/60 Hz In conforming to IEC 60947-2 2000 cycles 690 V AC 50/60 Hz In/2 conforming to IEC 60947-2 3000 cycles 440 V AC 50/60 Hz In/2 conforming to IEC 60947-2
Connection pitch	115 mm
[Icw] rated short-time withstand current	32 kA (3 s) conforming to IEC 60947-2
Integral instant protection	130 kA
Height	350 mm
Width	420 mm
Depth	160 mm

Environment

Standards	IEC 60947-2
Product certifications	ASEFA ASTA LCIE
Power losses	84 W
IP degree of protection	IP40 conforming to IEC 60529
IK degree of protection	IK07 conforming to EN 50102
Pollution degree	3 conforming to IEC 60947
Ambient air temperature for operation	-25...70 °C
Ambient air temperature for storage	-50...85 °C

Contractual warranty

Warranty period	18 months